Profil 24 models

1/24

Ferrari 499 P 1st

Le Mans 2023

Ref P24143

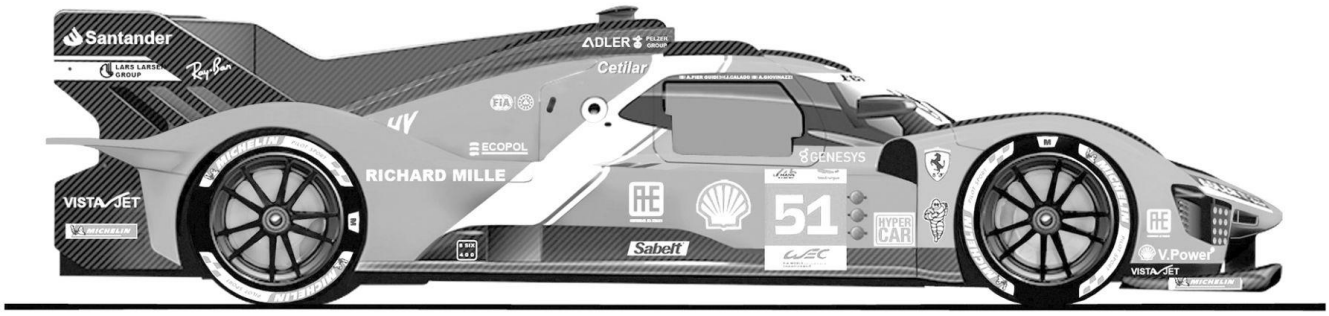

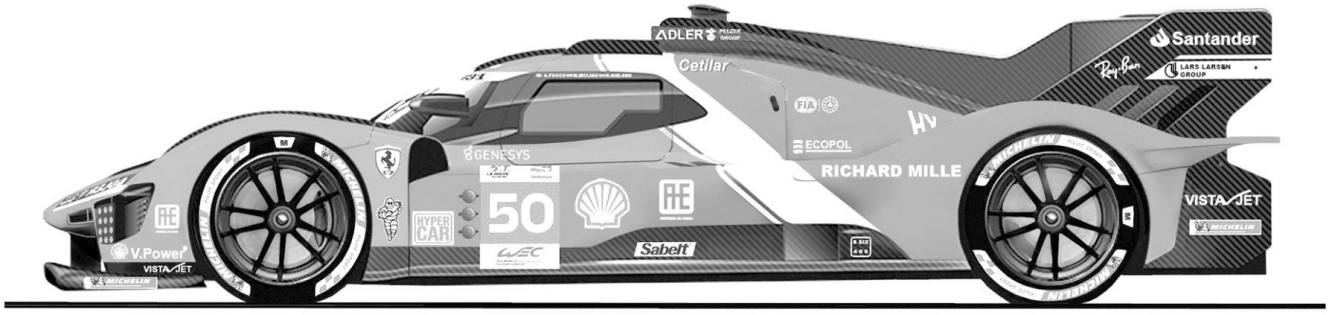

Profil 24 models 47 rue Julien Bodereau 72000 Le Mans France
www.profil24-models.com contact@profil24-models.com

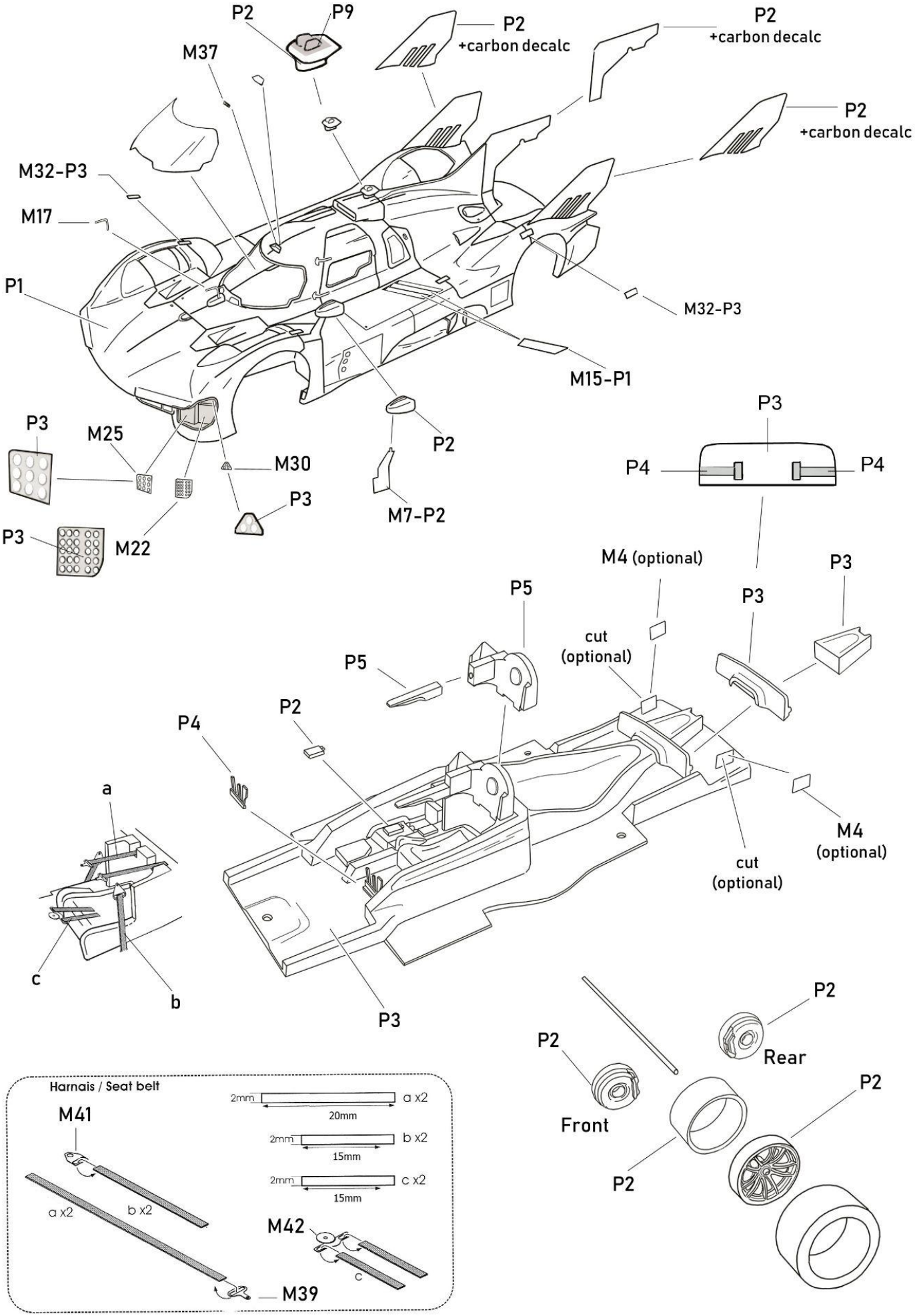
P2
P9
P2
+carbon decalc
P2
+carbon decalc
M37
P2
+carbon decalc
M32-P3
M17
P1
M32-P3
M15-P1
P3
M25
M30
P2
P3
M22
P3
M7-P2
P3
P4
P4
M4 (optional)
P3
P3
P5
cut
(optional)
P5
P2
P4
a
M4
(optional)
cut
(optional)
c
b
P3
P2
Rear
P2
Front
P2
P2
Harnais / Seat belt
M41
2mm
a x2
20mm
2mm
b x2
15mm
2mm
c x2
15mm
a x2
b x2
M42
c
M39

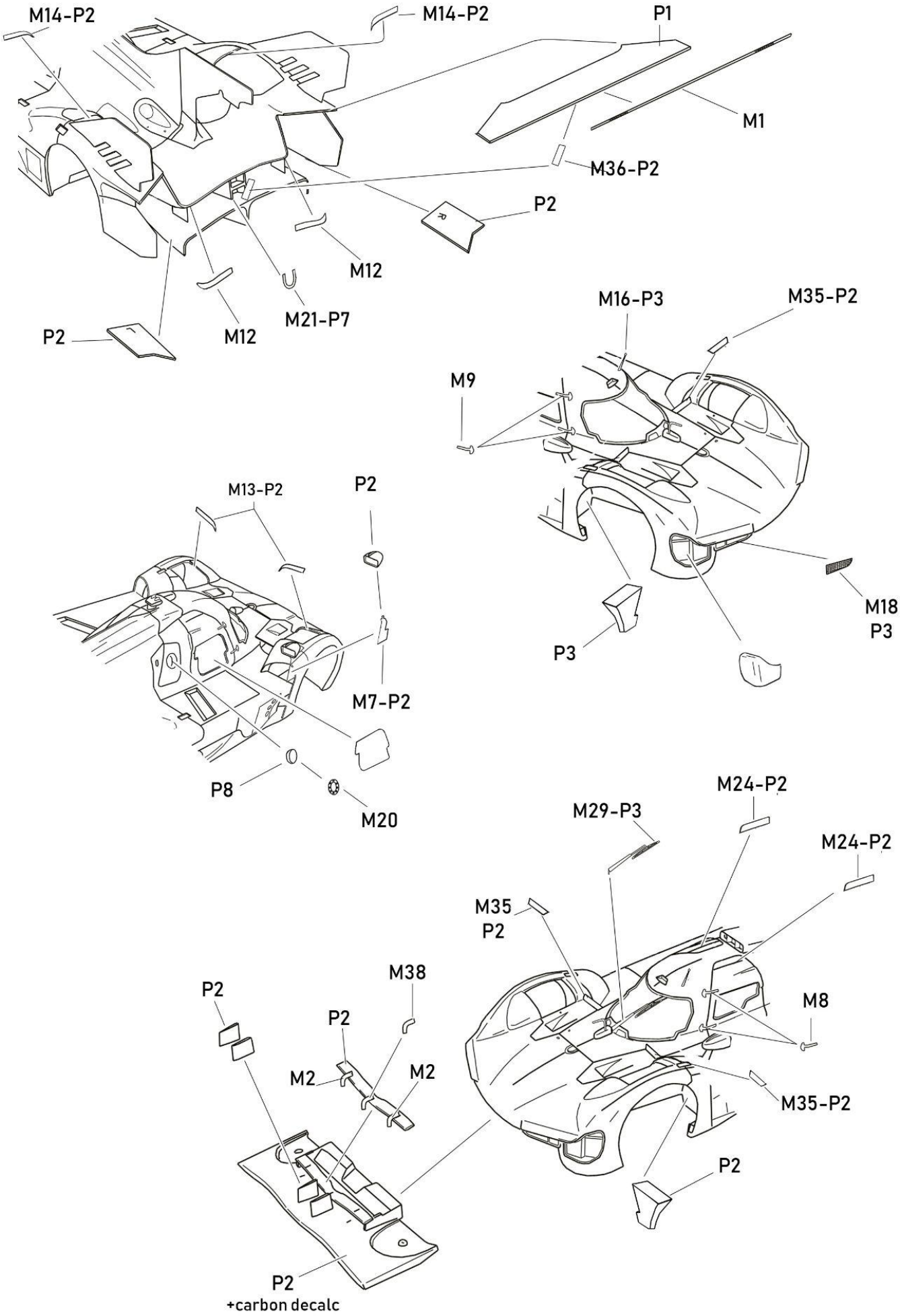
M14-P2
M14-P2
P1
M1
M36-P2
P2
M12
M21-P7
M12
P2
M16-P3
M35-P2
M9
M18
P3
P3
M13-P2
P2
M7-P2
P8
M20
M24-P2
M29-P3
M24-P2
M35
P2
M38
P2
M8
P2
M2
M2
M35-P2
P2
P2
+carbon decalc

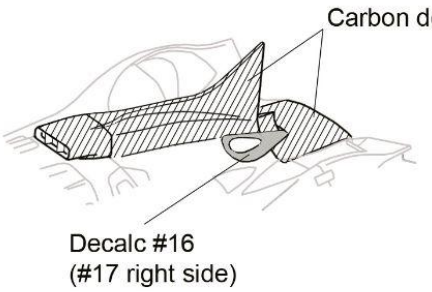
Carbon decalc
Decalc #16
(#17 right side)

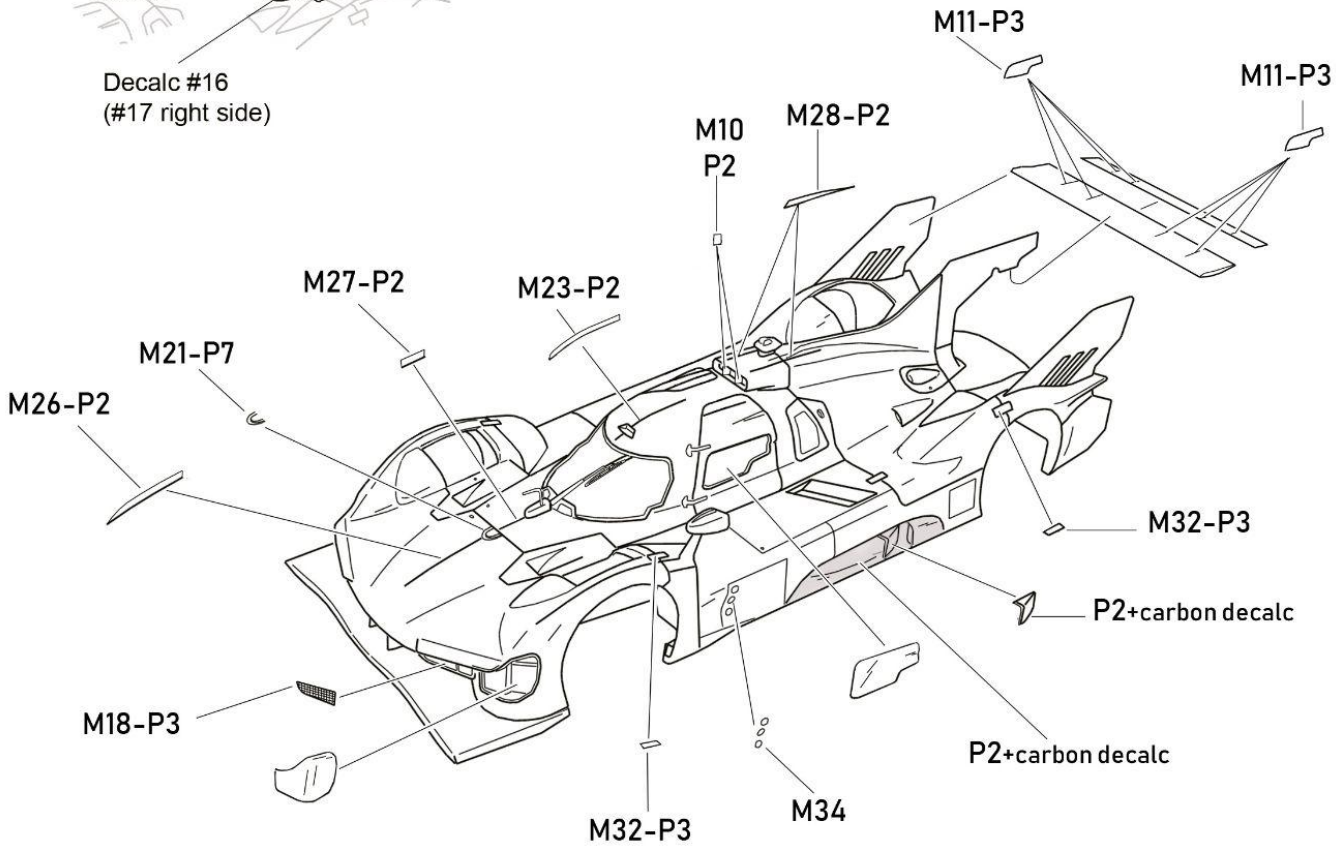
M11-P3
M11-P3
M10
P2
M28-P2
M27-P2
M23-P2
M21-P7
M26-P2
M32-P3
P2+carbon decalc
M18-P3
P2+carbon decalc
M34
M32-P3

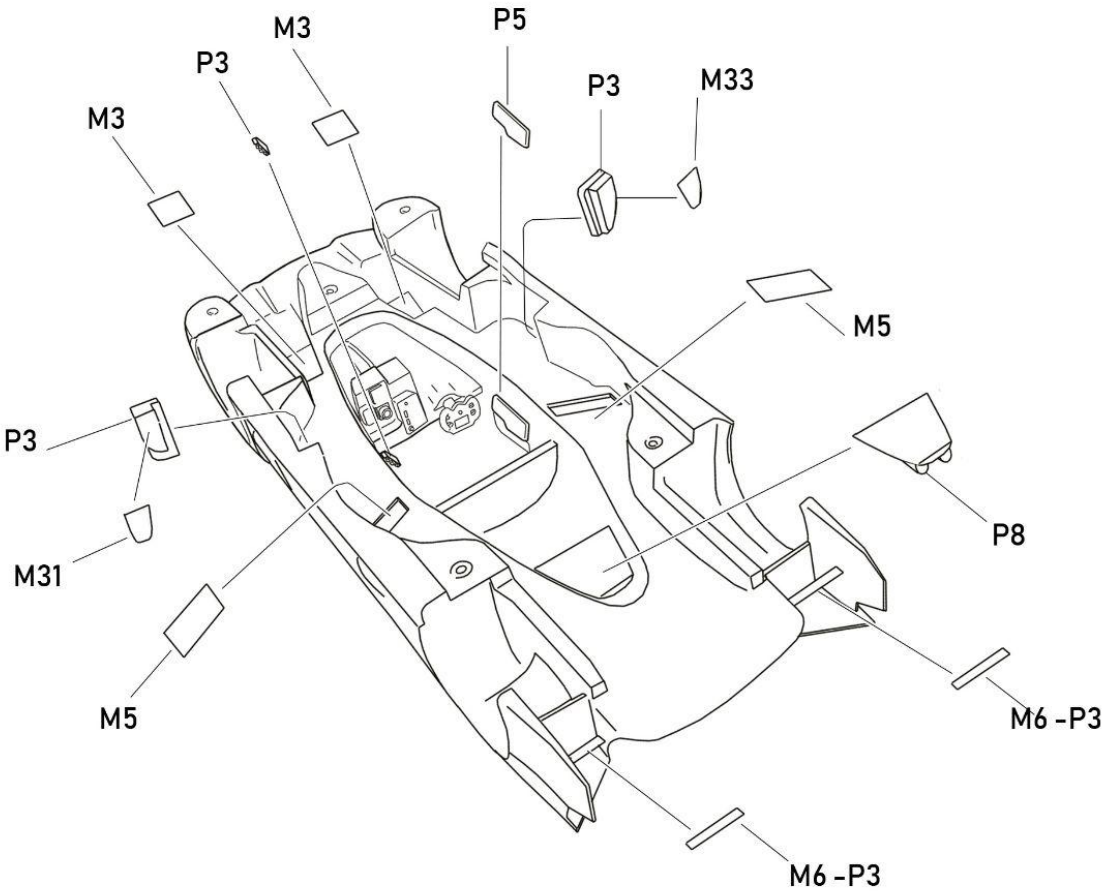
M3
P3
M3
P5
P3
M33
M5
P3
M31
P8
M5
M6 -P3
M6 -P3